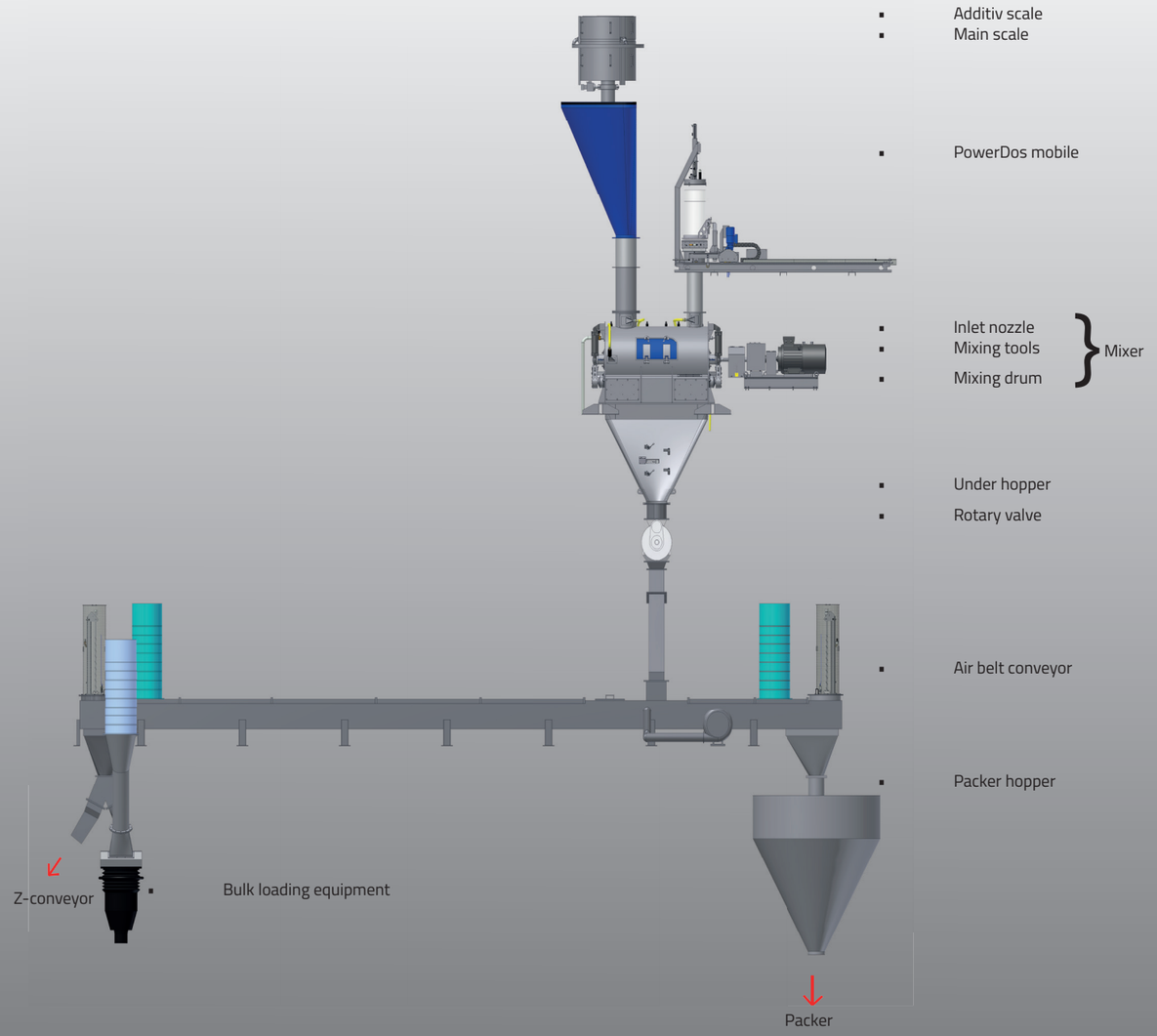

m-tec mixing plant

m-tec mathis technik gmbh
Otto-Hahn-Straße 6
D-79395, Neuenburg
phone +49 7631 709-0
fax +49 7631 709-120
info.de@m-tec.com - www.m-tec.com

m-tec®
Technology for better building

Automatic cleaning system for mixing plants

Easy and reliable cleaning!

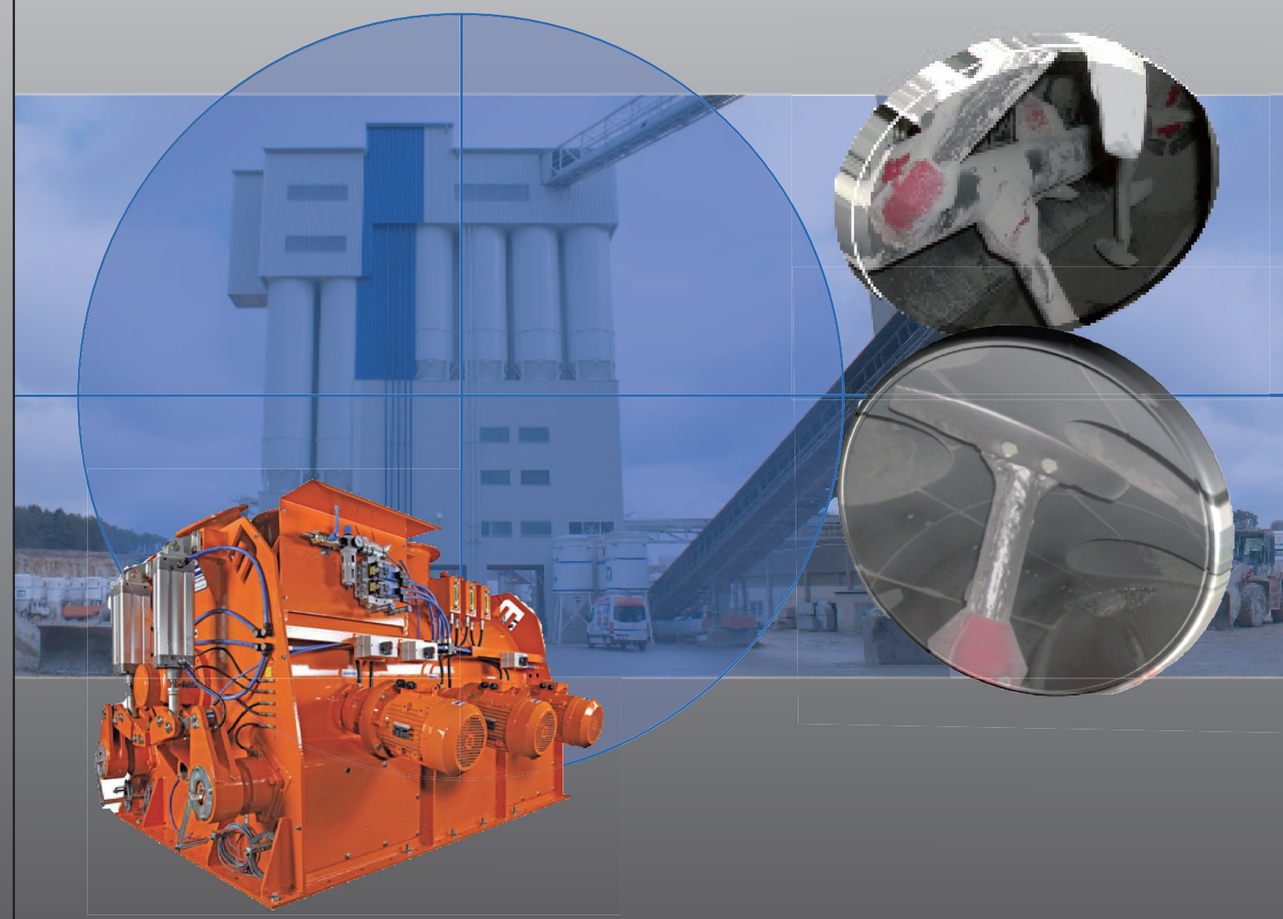

m-tec®
Technology for better building

A clean solution

- Pneumatic jet-cleaning by specialised flat and hollow jet nozzles
- Direct targeting on critical residue (sedimentary deposit) zones
- Completely automatic cleaning process
- Upgrade of existing machines possible – even third party manufacturer

Cleaning areas:

Upstream areas:

- Scales
- Pre-hoppers

Mixer area:

- Inlet nozzels
- Mixing drum
- Mixing unit
- Under hopper

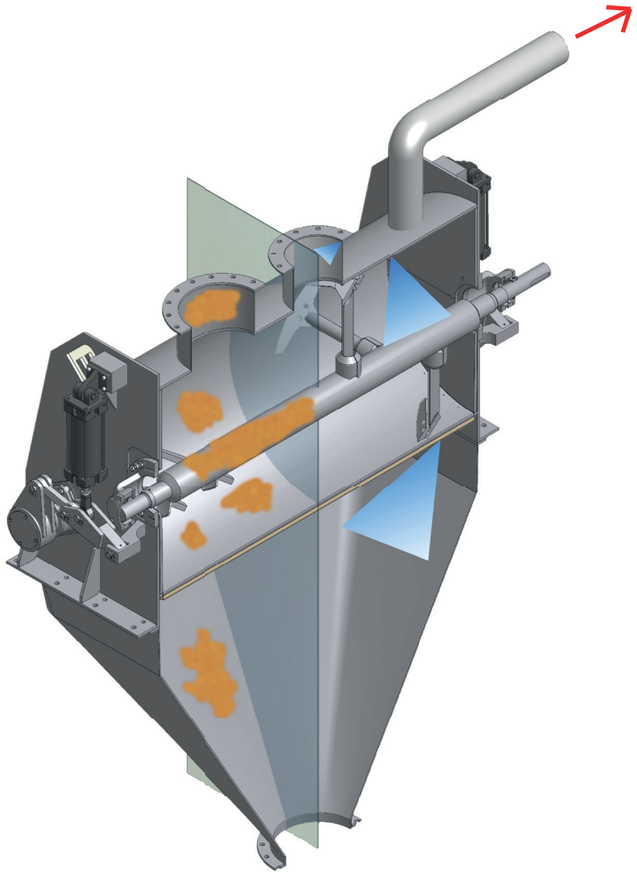

Downstream areas:

- Rotary valve
- Divider
- Conveying belts
- Bulk loading
- Packer pre-hopper

Process benefits:

- Avoidance of gross contamination. No manual cleaning necessary, even in case of difficult produkt switch.
- Concentrated targeting by pneumatic jets with specially designed cleaning nozzles.
- Evacuation of the raised dust / gravimetrical downstream transport of grains.
- Improve safety, no manual interventions while cleaning down.
- Plant operators are not exposed to harming dusts. Therefore improved E & H conditions for operators.
- Operational hours reduced, due to automation.
- Reduction of manpower

Before cleaning

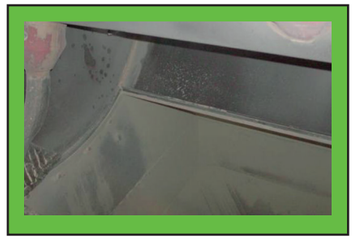

After cleaning

Global concept

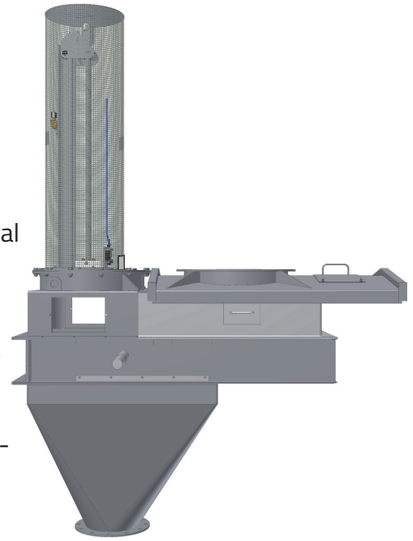

The pneumatical cleaning system is based on a principle which is extendable to the mixer's upstream and downstream equipment. The sedimentary residue deposits will be removed by targeted air pulses, falling downstream or will be evacuated through the central dedusting system afterwards. m-tec supports the change of the up- and downstream equipment.

In this way cross contaminations in the entire process can be prevented.

And product quality as well as higher plant efficiency can be achieved.

The automatic cleaning system can be retrofitted for existing mixers – for m-tec mixers as well as for third party manufacturer mixers.

For handling with ATEX-relevant products, please confer with m-tec!

Interested in having a cleaning system?

The only thing you need is a sufficient compressed air supply and an active dedusting system. m-tec will take charge for the necessary equipment.